



NAHDMI-W-B

HDMI feedthrough adapter, black D-shape housing

Neutrik's HDMI solution for the transmission of any digital TV and PC video format including high-definition video (HDTV) can be integrated in networks very easy.

Features & Benefits

- To transmit any digital TV and PC video format including high-definition video (HDTV)
- HDMI feedthrough adapter with 19 pole HDMI receptacle at both ends
- IP65 ingress protection in mated condition with NKHDMI-* and SCDP-* sealing gasket
- Universally accepted standard D-shape housing
- Removable screen to chassis grounding

All rights reserved / 21.07.2026

- Shielded system - high noise immunity and EMI protection due to continuous 360 degree shield

Removable screen to chassis grounding

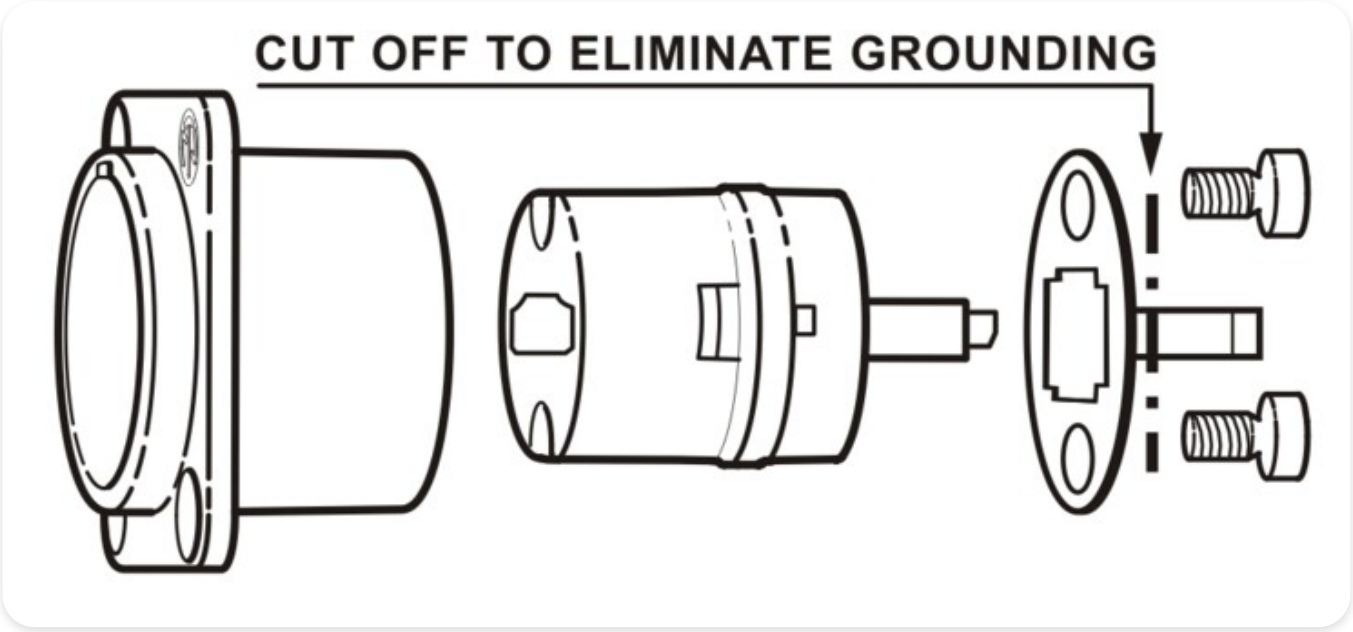

Technical Information

Product	
Title	NAHDMI-W-B
Connection Type	Adapter
Gender	female

Mechanical	
Wiresize	
Locking device	Push-Pull
Mounting direction	Front or rear mounting (max 2 mm panel thickness)
Chassis shape	D
Lifetime	> 1000 mating cycles

All rights reserved / 21.07.2026

Material	
Contact plating	Au
Contacts	Bronze (CuSn)
Insert	
Shell	Zinc diecast (ZnAl4Cu1)
Shell plating	Black chromium

Environmental	
Flammability	UL 94 V-0
Standard compliance	HDMI 2.0
Temperature range	-25 °C to +85 °C

All rights reserved / 21.07.2026